ASYMMETRICAL PERFORMANCE OF HYBRID MANETS

Alicia Triviño-Cabrera, Eduardo Casilari, Francisco J. González-Cañete
Dpto. Tecnología Electrónica, University of Málaga (Spain)
atc@uma.es

ABSTRACT

The connection of mobile ad hoc networks into the Internet has led to the proposal of several mechanisms that complete the ad hoc routing procedures in order to facilitate a proper use of the Access Router. Most of the proposed mechanisms require a dedicated and fixed entity acting as the Internet Gateway. This demand prevents MANET from operating in scenarios prepared for one-hop Wireless LAN where a Gateway is not previously installed. One possible solution is described in the mobile multi-gateway support that transfers the gateway functionalities to a component of the MANET. Due to this transfer, multi-hop ad hoc networks get the flexibility to be integrated into the Internet in scenarios prepared for one-hop WLAN. However, this transfer also implies some significant effects on the network performance that depends on the considered traffic (uplink/downlink). This paper studies the performance of this mechanism and shows the asymmetric behavior that can be achieved when this support is employed.

KEYWORDS

MANET, Routing, Gateway, mobile

1. INTRODUCTION

The production of powerful mobile devices in conjunction with the extended use of some web services facilitate that Wireless Mesh Networks (WMN) are receiving significant attention nowadays. They consist of a set of installed and static access routers that provide multi-hop communication in their corresponding domains. Under this scheme, wireless devices can be easily interconnected to external hosts in the Internet.

For a further analysis of this sort of networks, they can be simplified into the union of multiple hybrid Mobile Ad hoc NETworks (MANET). To obtain connected ad hoc networks (or hybrid MANETs), it is necessary to introduce an access router that provides the link to external hosts. The characteristics of this access router differ in the proposed mechanisms. Some of them consider that specific access router that support multi-hop communications should be installed in the areas where MANETs are expected to operate. Under this scheme, the access router is incorporated with extra functionalities so it behaves as an Internet Gateway. Although this strategy can be easily integrated into the routing procedures, it demands for a scheduled and planned utilization of the network that is not always possible to perform. In order to overcome this restriction, the mobile multi-gateway support was proposed as the mechanism by which MANETs are able to be connected to external networks where conventional or non-specific access routers are available. Then, the network obtains the flexibility to operate in an increased number and types of scenarios. However, the performance of the network should be taken into consideration. The node which is expected to act as the Internet Gateway as well as its communication with the Access Router should be further studied in order to understand how the network performs. In this paper, these issues will be analyzed. Specifically, an asymmetric behavior is observed when downlink and uplink traffic are considered.

The rest of this paper is organized as follows. Firstly, some related work will be presented in Section 2. Section 3 draws the main characteristics of the mobile multi-gateway support. The performance of the network interconnected through this mechanism will be analyzed by means of simulations that will be shown in Section 4. Finally some conclusions are reported in Section 5.

2. RELATED WORK

Most of the proposed solutions to provide access to the Internet in MANET define a dedicated entity that acts as the Internet Gateway. In the IPv6 context, one of the earliest references was due to R. Wakikawa et al. (Wakikawa, 2005). Their mechanism, often called global connectivity, is based on a fixed Gateway attached to each access router that provides globally routable addresses to the ad hoc nodes. The document describes Internet Gateway operation as well as how to integrate it into the routing procedures. It proposes proactive and reactive methods for gateway discovery. The hybrid approach or the limitation of the number of hops that Gateway Advertisement messages could be forwarded was studied by Ratanchandani et al (Ratanchandani, 2003). Mona Ghassemian et. al. compare proactive, reactive as well as hybrid internet gateway discovery in the global connectivity mechanism (Ghassemian, 2003). They conclude that for the same mobility scenario, proactive approach results in more multi-hop handovers due to route optimizations. Route optimization results in shorter average handover delays in proactive approaches.

On the other hand, Vinh Dien Hoang et al. propose solution for Internet access by using multiple access routers simultaneously in scenarios equipped with MAPs (Mobility Anchor Point) (Dienh, 2004). It concludes that using multiple access routers help ad hoc devices to maintain its connection even during its handoff. Also, connection performance and reliability is increased. Simulation results given in this paper shows that proactive and reactive routing protocols using two access routers at the same time improves throughput, especially in the small network. However, in large network, utilizing two access routers produces more routing overhead.

C. Jelger et al. proposed a mechanism where gateways are responsible for auto-configuration of global addresses by sending periodical messages that inform about their existence as well as the prefix they process. As multiple gateways may coexist in the same ad hoc network, the nodes may receive multiple auto-configuration messages originated at different gateways. However, the node does not forward all of them, but, based on some criteria, it will choose one gateway and it will send its up-dated message. By this method, mobile nodes can have a continuous path to the Gate-way where every node that composes the path shares the same prefix (Jelger, 2003).

Finally, S. Ruffino and P. Stupar proposed the use of multiple fixed gateways to integrate MANET into the Internet. These elements periodically announce their pre-fixes through special messages and nodes receiving this information generate the appropriate IPv6 addresses. As nodes possess different IPv6 addresses (one for every detected Gateway), they can dynamically change the global address they use for their external communication if, for example, one gateway is not operative any longer (Ruffino, 2006).

In the former mechanisms, Gateways are understood as fixed nodes which are specifically located in the MANET to enable Internet communication. These characteristics imply the necessity of preparing the scenarios where multi-hop ad hoc networks are going to operate by introducing the correspondent gateways. This prevision is totally opposite to the nature of MANETs that are intended to be used anywhere and anytime. One of the first mechanisms where mobility is associated to the Gateway was published by H. Ammari and H. El-Rewini. In this strategy some of the MANET nodes can act as Gateways. They can move but their movements are restricted not to leave the coverage area of the access router. Through simulations they show the performance of this mechanism is related to the number of mobile gateways as well as their maximum speed (Ammari, 2004).

The main drawback of this proposed is related to the classification of mobile nodes into gateways and no gateways that demands for a previous work that prevents the flexibility of MANET to operate whenever. The restriction imposed on the gateways by the former mechanism is avoided in the mobile multiple gateway support. In this solution, mobile gateways can leave the coverage area of the access router. Therefore, a distributed algorithm is required for a dynamic gateway selection. In the next section this mechanism is explained in depth (Singh, 2004).

3. MOBILE MUTI-GATEWAY SUPPORT

The mobile multi-gateway support was originated with the aim of simplifying the restrictions associated to heterogeneous environments where multi-hop ad hoc networks may coexist with fixed networks. By the transfer of Gateway functionalities to a MANET node, the introduction of a dedicated and fixed Gateway is

suppressed. Therefore, the scenarios where MANETs can operate increase. The mechanism is intended for coverage area extensions in cellular networks where mobile nodes belonging to the same ad hoc network communicate among them without the use of the deployed network. However, the communication with external host requires the use of a MANET node acting as the Internet Gateway that is not controlled by the telecommunication operator. On the other hand, this support is also appropriate for automotive scenarios where a vehicle temporally connects to a petrol station or to an UMTS access and it performs the Gateway functionalities for some other vehicles.

In both situations the gateway can freely move. The method of selecting the node to operate as Gateway as well as the treatment associated to its mobility are the main issues of this mechanism.

3.1 Gateways

Among all the devices that are in the coverage area of the Access Router, one of them is temporally selected to behave as the Internet Gateway. This node is called the Default Gateway (DG) meanwhile the rest of the terminals sited in the abovementioned area are referred as the Candidate Gateways (CG). Therefore, at a certain instant of time, one DG and no or multiple CG could coexist.

All the Gateways (Default or Candidate) receive RA messages generated by the Access Router. However, only the DG is responsible for propagating the information it receives from the Access Router. With this purpose, the DG periodically sends MRA (Modified Router Advertisement) messages that can be forwarded through multiple hops. By the reception of the MRA message, the mobile device can auto-configure its global IPv6 address and update its correspondent route to de DG. When the terminal generates traffic for external hosts, it will forward the packets to the DG using this route. On the other hand, when the Access Router receives packets whose destination is a MANET component, it will forward the packets to the DG which will initiate the ad hoc routing to the destination ad hoc node.

The information contained in the MRA messages can be used during a period of time associated to its lifetime field. Before this expiration time, the mobile nodes expect to receive a new MRA message. While the DG stays in the coverage area of the Access Router, the nodes in the MANET periodically receive the MRA message. However, as no mobility restriction is imposed on the DG, it could escape from the coverage area and immediately it would stop its gateway functionalities. The rest of the mobile nodes will assume there is no DG configured as they have not received an expected MRA message. At that moment, the CGs should initiate the gateway selection procedure. This procedure is a distributed algorithm that respects the MANET nature as it does not need any centralised entity to select the future DG. This mechanism consists of starting a random internal timer. When this random time is over, the CG checks if it has received one MRA message since the timer was started. The reception of this message would imply the presence of a new DG, and consequently, the CG will not configure itself as the DG. However, if the CG verifies it has not received any MRA message it will automatically configure itself as the new DG. To inform the MANET about its new role, it will send a MRA message immediately.

Although it was not specified in the IETF Draft, this technique may cause the presence of several DGs at the same time if the values of their random timers are very close or the loss of MRA occurs. As, only one DG may operate in a MANET, there should be a new procedure to ensure the uniqueness of this role. The authors of this paper propose the use of a simple algorithm based on the IPv6 address as a priority parameter for remaining as the DG: when a DG receives a MRA message generated at a node with a lower IPv6 address, it will stop its gateways functionalities. So, it will give priority to the DG with a lower IPv6 address to continue operating as the DG.

In order to reduce the load in the network, the mobile devices in the MANET also apply this priority algorithm when they receive multiple MRA messages. Although the reception if used for route updates, they would only forward the message associated to the DG with a lower IPv6 address.

3.2 Gateway Switching

Gateways must check they periodically receive RA messages in order to know if they continue in the coverage area of the Access Router. When the DG detects it has not received an expected RA message, it immediately stops its gateways functionalities that includes the emission of MRA messages. The rest of the components of the MANET also expect the reception of MRA messages but as no default gateway exits, the

expected reception will not occur. At that instant, the candidate gateways will configure a new Default Gateway following the procedure explained in the previous section.

As it is illustrated in figure 1, there is a period of time where no DG is configured. The length of the interval or switching time is quite significant in the behaviour of the mechanism as during that period the MANET behaves like an isolated entity.

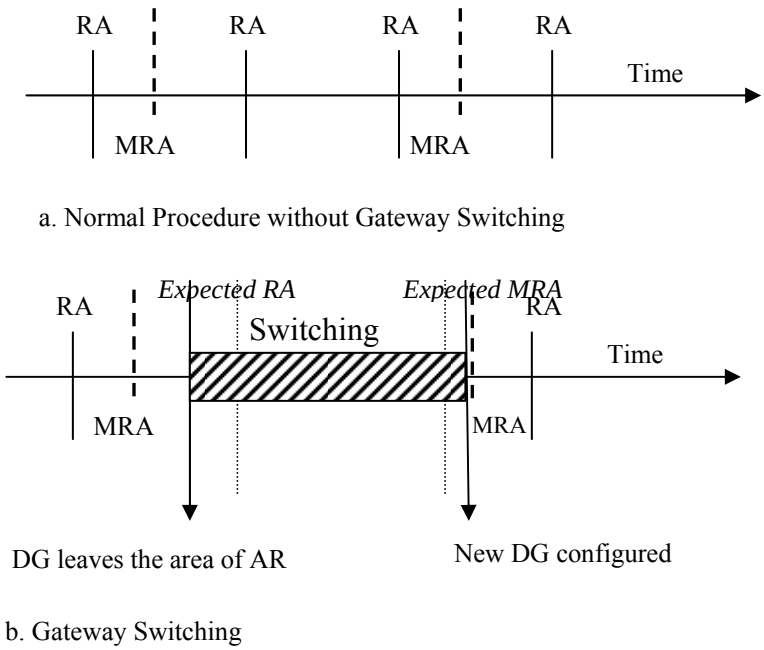

Figure 1. Gateway Switching in mobile multi-gateway support

4. SIMULATION RESULTS

In order to evaluate the performance of the proposed mechanism, a software module to include mobile multi-gateway support was developed and integrated into the Network Simulator on Linux machine (Fall, 2005).

Simulations were run in a1500mx300m area with the access router located neat the center of the network. Ad hoc network was formed among 50 nodes whose movements were based on the Modified Random WayPoint model (Yoon, 2003). The characterization of each mobility scenario is based on the Average Link Duration (Boleng, 2002). For a precise computation of this parameter, long simulations were executed (Casilari, 2005). An additional variation compared to the usual mobility pattern was to establish a correlation between the pause time and the average speed. Two scenarios have been evaluated: no pause time and static nodes during half of the simulation time. For this purpose, the pause time is defined as a function of the mean time between movements.

Due to its popularity, AODV has been chosen as the ad hoc protocol (Perkins, 2003). In order to analyze the symmetry of the mobile multi-gateway support, two traffic patterns have been analyzed separately. Firstly, we studied the uplink traffic by means of 10 CBR sources whose destinations correspond to an exterior host. For the simulations, all the uplink traffic is sent from the mobile node source of the data to the Access Router. No losses are associated to the link AR-exterior host. On the other hand, downlink traffic is also simulated. This traffic is composed of 10 CBR sources from exterior hosts that send packets to 10 different mobile nodes in the MANET.

Table 1 summarizes the simulation parameters.

Table 1. Simulation parameters

Simulation Area	1500 m x 300 m
Mobile nodes	50
Mobility pattern	Max. speed: [5,10,15] m/s Minimum speed = 1 m/s Pause Time : [0%, 50%]
Traffic pattern (uplink /downlink)	10 CBR sources Rate = 4 packets/s Packet size= 512 Bytes
Simulation Time	5000 s
Transmission Range	250 m
Number of trials	3
Ad hoc protocol	AODV Link Layer Detection enabled Local Repair disabled
Link Level Layer	802.11b CTS/ RTS enabled
Internal Queue	64 packets
RA interval	2 s
MRA interval	4 s

The performance of the mechanism is measured by means of the following metrics:

- PDR (Packet Delivery Ratio): It is defined as the ratio between the packets received at the destination and the packets generated by the sources.
- Median End-to-End Delay. Although most of the works measure the mean value of the End-to-End Delay, the simulation tool shows important lacks related to the ARP that influences the delay associated to some packets. Taking into consideration these drawbacks, the authors decided the utilization of the median value is more appropriate due to its stability.
- Normalized overhead. It corresponds to the ratio between the control packets respect to the received data packets. Each hop of the control packets is computed as a new control packet.

The obtained data are represented in Figures 2, 3 and 4. To facilitate the understanding and to show the general tendencies of the evaluated mechanism, the results of the different simulations have been also interpolated through a linear regression, resulting in the straight lines of the figures

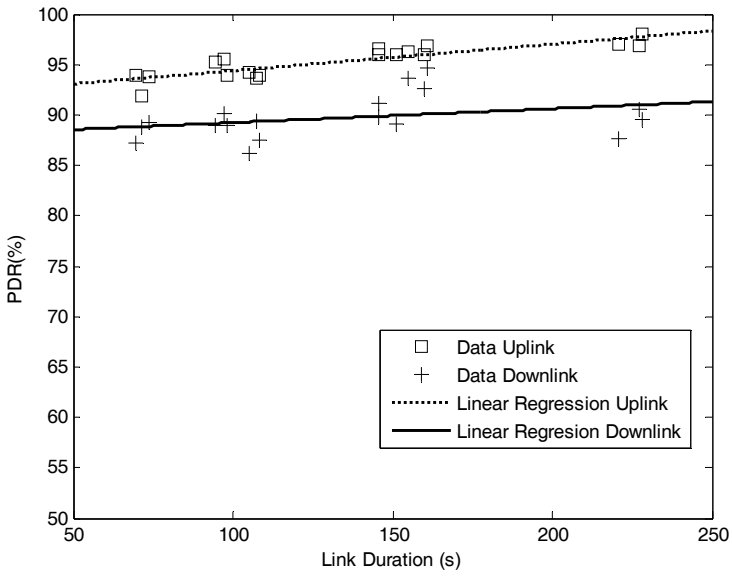

Figure 2. Packet Delivery Ratio versus Average Link Duration

In Figure 2, we can conclude that in scenarios with downlink traffic the PDR is lower in comparison to those where uplink traffic is present. In order to explain this behavior, the routing procedure should be taken into account. One of the most critical components of this mechanism is the link established between the Access Router and the DG. When uplink traffic is considered, the packets to exterior hosts can be directly sent from any Candidate Gateway to the Access Router. However, downlink traffic demands the utilization of the link AR-DG as all the packets whose destination is a MANET node and are received by the AR, are forwarded to the DG. This characteristic can lead to congestion on this link and, therefore, a bottle-neck is detected. The effects of this bottle-neck are shown in the performance of the mechanism.

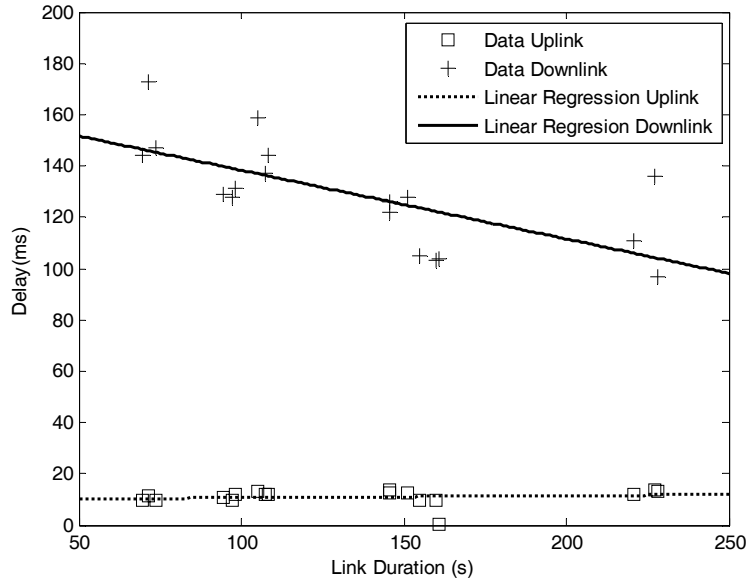

Figure 3. Median End-to-End Delay versus Average Link Duration

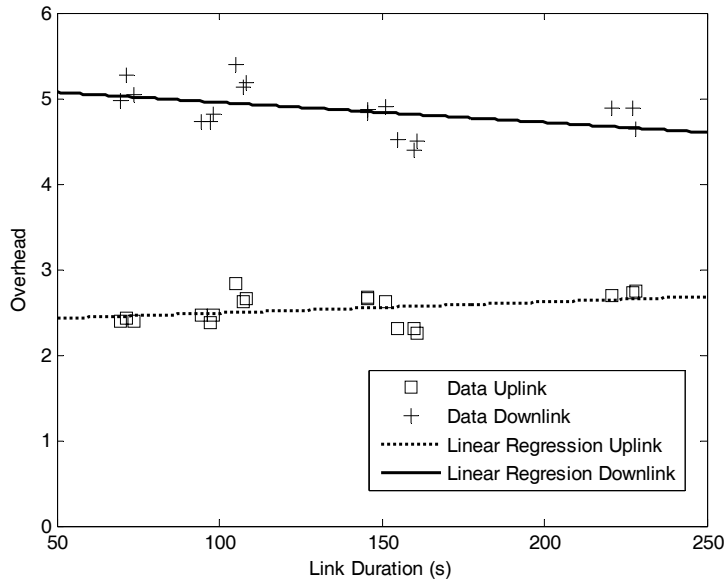

Figure 4. Normalized Overhead versus Average Link Duration

The ad hoc nodes periodically update the routes to the exterior hosts by the reception of MRA messages but DG does not posses any updated route for any MANET node. Therefore, when packets are received at the

DG, it will start the route discovery mechanism in order to forward the packets through the corresponding route. Route discovery implies the increment of control packets as well as the storage of packets until the procedure is finished. As a consequence of route discovery, packets related to downlink traffic experiment a higher delay compared to the delay of uplink packets. This increment is shown in Figure 3.

On the other hand, the control packets generated in the route discovery produce an increment of the normalized overhead, as it is illustrated in Figure 4. The control load produces battery consumption in the MANET nodes. So it is important to minimize it.

5. CONCLUSIONS

The paper presents the performance of mobile multi-gateway support to integrate MANET into external networks. By means of simulations, it is possible to appreciate an asymmetry in the behavior of this mechanism for downlink and uplink traffic. Downlink traffic results less reliable and packets are received latter than in uplink traffic. Furthermore, the load in the network is superior in scenarios where downlink traffic exits as route discovery procedures must be performed.

The observed performance of downlink traffic encourages the utilization of the mobile multi-gateway in those scenarios where uplink or bi-directional communications are expected.

The high values of overhead in scenarios with downlink traffic suggest the analysis of mechanisms in order to minimize the control load in the network. Some techniques presented in ad hoc protocols, as in OLSR, may be appropriate for this purpose.

REFERENCES

Ammari,H., El-Rewini, H.: *Integration of Mobile Ad Hoc Networks and the Internet Using Mobile Gateways*, 18th International Parallel and Distributed Processing Symposium (IPDPS'04).

Boleng, J., Navidi, W., Camp,T.*: Metrics to enable Adaptive Protocols for Mobile Ad Hoc Networks*, Proceedings of ICWN'02, pp. 293-298 (June 2002).

Casilari, E., Triviño-Cabrera, A.:A *practical study of the Random Waypoint mobility model in simulations of ad hoc networks*, Proc. of the 19th International Teletraffic Congress (ITC'19), Beijing (China) (September 2005).

Fall,K., Varadhan, K. *: Ns Notes and Documentation*, The VINT Project. UCBerkley, LBN (2005).

Ghassemian, M., Hofmann, P., Aghvami, H., Prehofer, C.: *Analyses of Addressing and QoS Approaches for Ad Hoc Connectivity with the Internet*, IEEE PIMRC 2003, Beijing, China (September 2003).

Hoang, V. D., Nguyen, H. M.: *A novel solution for global connectivity in MANET*", in proceedings of VTC 2004 fall, Los Angeles, CA, Sept 2004.

Jelger, C., Noel, T., Frey, A.*: Gateway and address autoconfiguration for IPv6 adhoc networks*, IETF Internet Draft, work in progress (October 2003).

Perkins, C., Belding-Royer, E., Das, S.: *Ad hoc On-Demand Distance Vector (AODV) Routing*, IETF RFC 3561 (July 2003).

Ratanchandani, P., Kravets, R. : A Hybrid Approach to Internet Connectivity for Mobile Ad Hoc Networks", Proc. Of IEEE WNCN 2003, vol.3, New Orleans, L.A, (March 2003).

Ruffino, S., Stupar, P.: Automatic configuration of IPv6 addresses for nodes in a MANET with multiple gateways, IETF Internet Draft, work in progress (June 2006).

Singh, S., Kim J.H., Choi,Y.G., Kang, K.L., Roh, Y.S.: Mobile multi-gateway support for IPv6 mobile ad hoc networks, IETF Internet Draft, work in progress, (June 2004).

Yoon, J., Liu, M., Noble, B.: *Random waypoint considered harmful*, Proceedings of Infocom'03, pp. 1312-1321. San Francisco (April 2003).

Wakikawa, R., Marinen, J., Perkins, C., Nilsson, A., Tuominen, A.J.: *Global Connectivity for IPv6 Mobile Ad hoc Networks,* IETF Internet Draft, work in progress (January 2005).